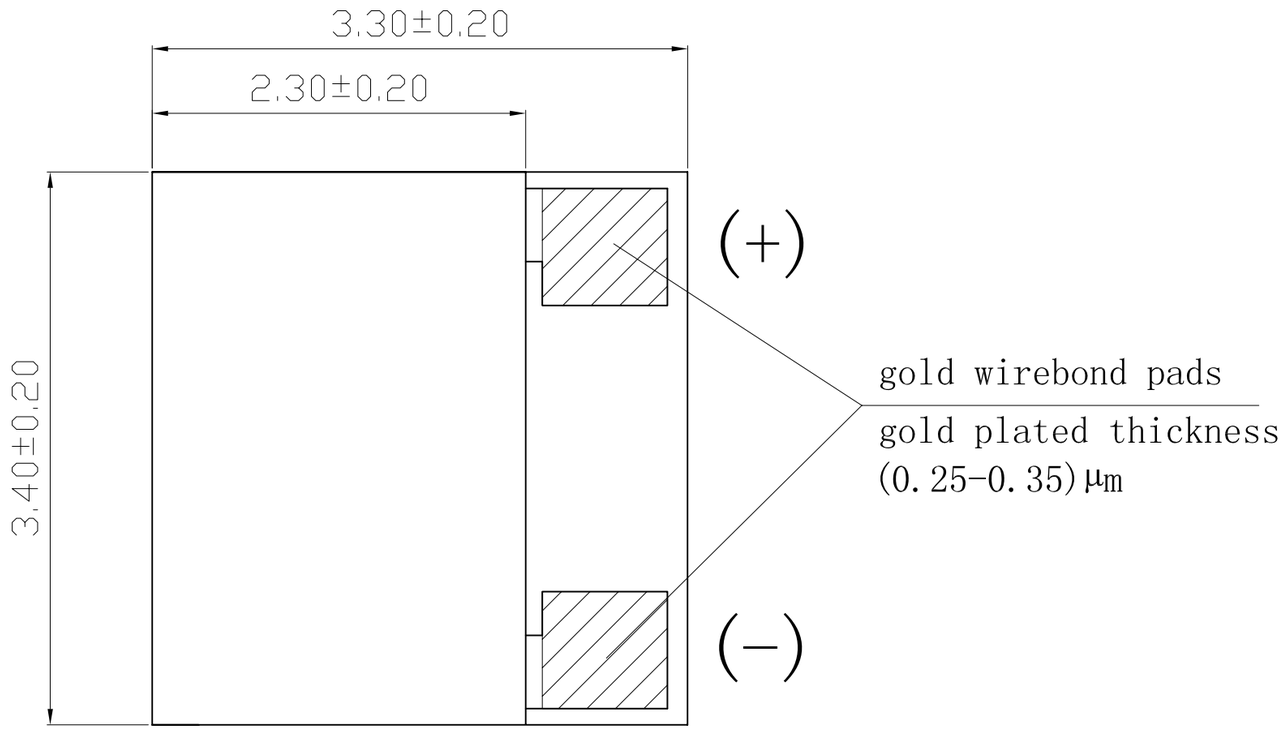

FERROTEC CONFIDENTIAL

1)The resistance of the module shall be within 0.68 to 0.92 ohms at an ambient temperature of 25 degrees Celsius.
2)The upper substrate shall be cold side if connecting the top weld to the positive pole of the power.

ROHS COMPLIANCE

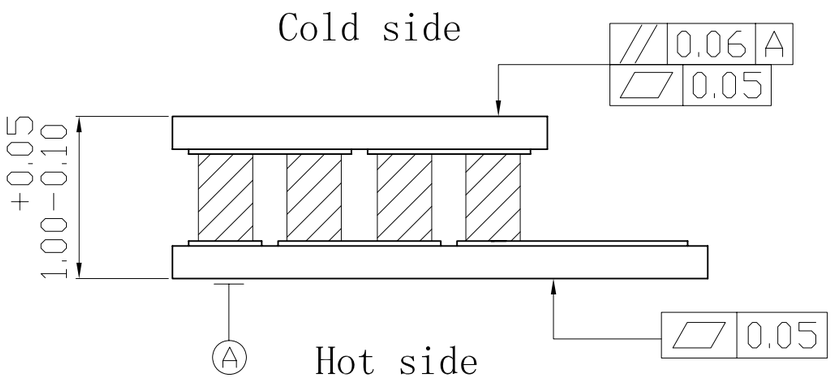

Item	Value	Conditions
Imax	1.5A	Qc=0, DT=DTmax, Th=50℃
Vmax	1.7V	Qc=0, I=Imax, Th=50℃
DTmax	76℃	Qc=0, I=Imax, Th=50℃
Qcmax	1.4W	I=Imax, DT=0, Th=50℃

Ferrotec Corporation
(Zhijiang Factory)
668# Binkang Road,Hangzhou Hi-tech Garden,Zhejiang Province,P.R.China

General Dimension Tolerance

Size range \ Process	Cutting common	Cutting special	Forging Common
Lessthan 6	±0.1	±0.15	±0.5
6 up to 30	±0.2		
30 up to 120	±0.3	±0.2	±0.7
120 up to 315	±0.5	±0.25	±1.0
315 up to 1000	±0.8	±0.4	±1.5
1000 up to 2000	±1.2	±0.6	±2.0

Pls	Date Modifying	Summary of Modification	By

Designed	Fangliang Hou	2013/11/09	Finished Mark
Checked	Yongqing Wu	2013/11/09	Material
FTH	Approved		Finish
FT	Approved		Raw Material Size
FTU	Approved		Raw Material Weight

Title	20035/012/015A		Proj. 3 Angle
Drawing Number	T1008-0800E		1/1
P/N	85399	Scale: Do not Scale	Rev. Z